Glock Installation

For Minimalist and 3-Dot Sets

Included Components

1. Front Sight
2. Front Sight Screw
3. Rear Sight
4. Red Tread Locker

Tools Needed

- Hammer
- Brass or Delrin Punch
- Alcohol
- Glock front install tool
- Q-tips
- Pliers
- File

Before installing or adjusting your sights, unload and check to ensure the firearm is unloaded.

1 Remove slide from frame per owner's manual instructions

2 Remove existing sights*

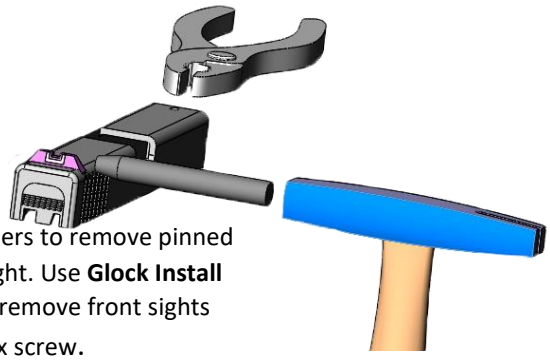

*Use pliers to remove pinned front sight. Use **Glock Install Tool** to remove front sights with hex screw.

3 Degrease slide and the sight contact surfaces

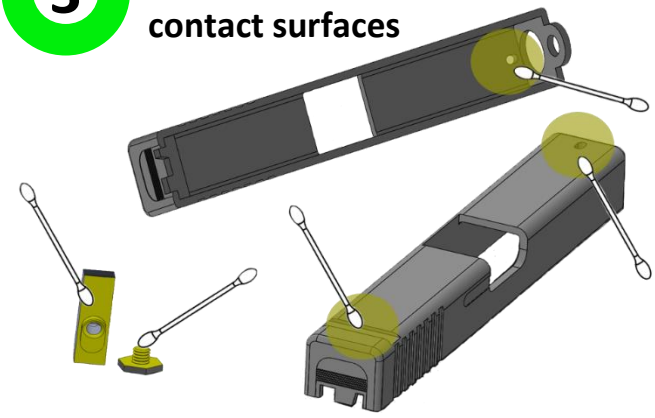

4 Test fit front sight

5 Apply Red threadlocker to the bottom of the sights and to the screw threads

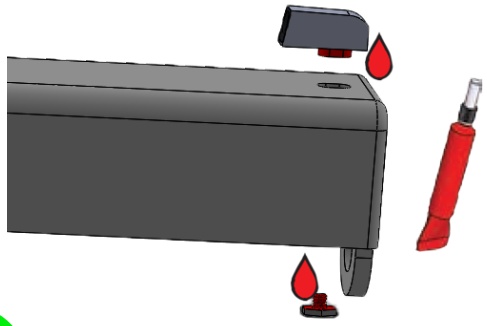

6 Assemble the front sight*

* Only tighten screw to fingertip tight, over tightening will sheer off the screw head.

7 Check sight alignment

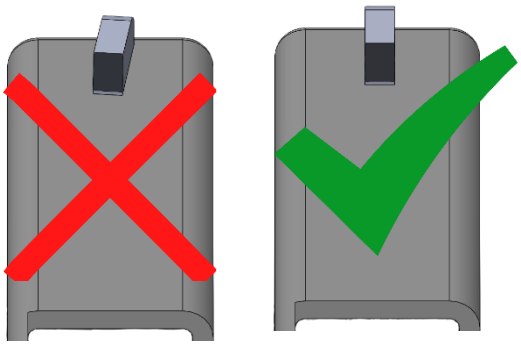

Questions or Problems? Ask the XS Tech Team! (888) 744-4884 | tech@xssights.com | 8:30 am -3:45 pm CT

8 Secure slide in a stable holding device

9 Push sight into the dovetail as far as it will go with finger pressure*

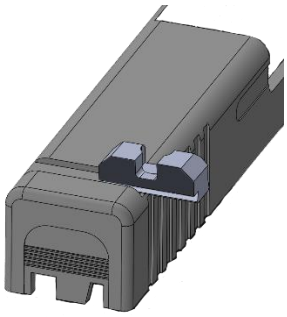

* The sight should slide 1/4th to 1/3rd of the way in

If it does not, file as needed until the sight presses in 1/3rd of the way into the dovetail

Run the bottom of the sights on a level file two times

Turn the sight 180° and run them down another two times

Test fit the sights and repeat filing steps if necessary

10 Drive the rear sights into the dovetail until the notch is centered on the slide*

*When driving sights into the dovetail ensure the punch is positioned on the sights dovetail (male dovetail)

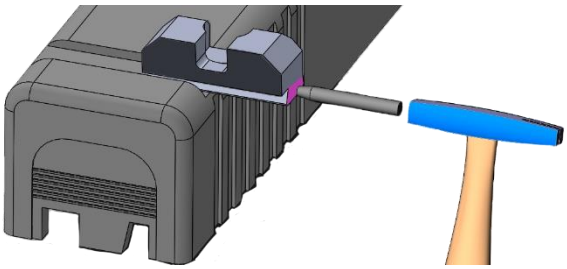

11 Apply threadlocker to all sides of the rear sights

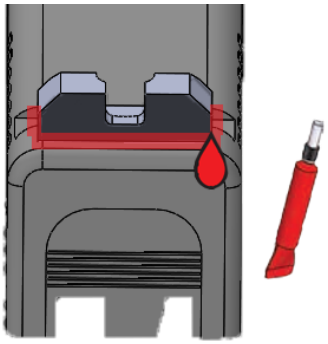

12 Let threadlocker set for <u>15+ minutes</u>

13 Lightly wipe off excess threadlocker with a Q-tip*

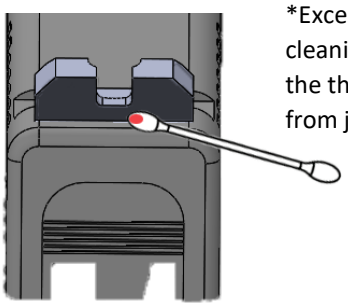

*Excessive cleaning can pull the threadlocker from joint

14 Let threadlocker and sights cure for 24 hours before shooting the firearm

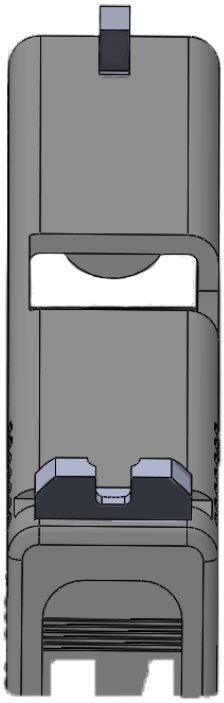

Pro Tip: Zero your sights before applying threadlocker to the rear sight

Many shooters like to fine tune their sight at the range, it's okay to shoot a few rounds to ensure your sights are zeroed before locking them into position

Our sights have lasted through 10,000 round shoot testing when installed correctly. Please use the threadlocker liberally to ensure the sights do not vibrate loose or come out.

15 Wipe sights down with protective oil in a light coating to prevent potential rust issues.

Questions or Problems? Ask the XS Tech Team! (888) 744-4884 | tech@xssights.com | 8:30 am -3:45 pm CT